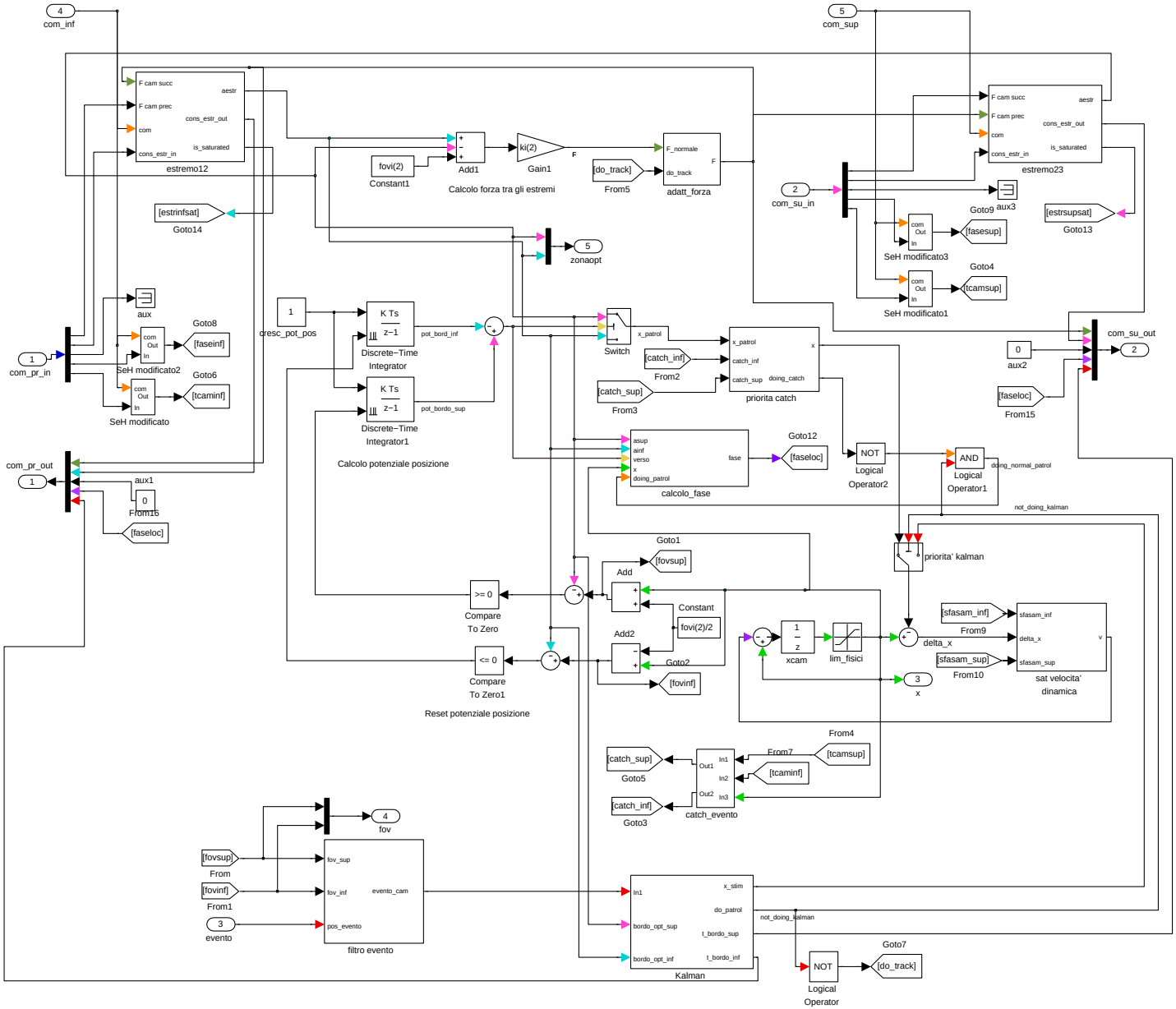
4
com_inf
5
com_sup
estremo12
estremo23
Add1
Gain1
ki(2)
Constant1
fovi(2)
Calcolo forza tra gli estremi
From5
[do_track]
adatt_forza
[estrinfsat]
Goto14
2
com_su_in
Goto9
aux3
[estrsupsat]
Goto13
SeH modificato3
[fasesup]
Goto4
[tcamsup]
SeH modificato1
5
zonaopt
aux
Goto8
[faseinf]
SeH modificato2
1
com_pr_in
Goto6
[tcaminf]
SeH modificato
1
dresc_pot_pos
K Ts
z−1
Discrete−Time
Integrator
Discrete−Time
Integrator1
Calcolo potenziale posizione
Switch
From2
[catch_inf]
From3
[catch_sup]
priorita catch
com_su_out
2
0
aux2
[faseloc]
From15
com_pr_out
1
aux1
0
From16
[faseloc]
calcolo_fase
Goto12
[faseloc]
NOT
Logical
Operator2
AND
Logical
Operator1
not_doing_kalman
Goto1
[fovsup]
priorita' kalman
Add
Constant
fovi(2)/2
Add2
Goto2
[fovinf]
Compare
To Zero
Compare
To Zero1
Reset potenziale posizione
xcam
lim_fisici
From9
[sfasam_inf]
From10
[sfasam_sup]
sat velocita'
dinamica
3
x
From4
[catch_sup]
Goto5
From7
[tcamsup]
[tcaminf]
catch_evento
[catch_inf]
Goto3
4
fov
[fovsup]
From
[fovinf]
From1
3
evento
filtro evento
Kalman
NOT
Logical
Operator
Goto7
[do_track]
[faseloc]
From13
[faseinf]
From8
[estrinfsat]
From14
calcolo_attesa_fase2
Goto10
[sfasam_inf]
[faseloc]
From11
[fasesup]
From6
[estrsupsat]
From12
calcolo_attesa_fase1
Goto11
[sfasam_sup]